PROPELLER INSTALLATION INSTRUCTIONS FOR SENSENICH 74DM7S14 PROPELLER ON CESSNA 172, MODELS I,K,L,M,N,P

I. Remove Cessna spinner assembly, McCauley Propeller and mounting bolts per instructions in Cessna 172 Maintenance Manuals. NOTE: Cessna spinner will be re-installed with Sensenich Propeller. Original McCauley attaching bolts can be used to install Sensenich Propeller.

II. INSTALLATION OF 74DM7S14 PROPELLER: (REFER TO DRAWING)

   a. Drill dowel pin holes in aft spinner bulkhead (P/N 0550321-10 OR EQUIV.), as per drawing #B-1745.

   b. Install propeller, aft spinner bulkhead (P/N 0550321-10 OR EQUIV), and spacer assembly on engine flange as per included drawing #SPC-B901.

   c. Position forward spinner bulkhead (P/N 0550321-4 OR EQUIV.), and insert propeller attaching bolts(6 each AN7H-77AS bolts and AN960-716 washers (furnished) or McCauley bolt kit #B-4622-20 (not-furnished)).

   d. Tighten propeller attaching bolts (480 to 540 in- lb.). Install 0.040 inch diameter stainless steel safety wire (not furnished).

   e. Install spinner cap (P/N 0550236-8 OR EQUIV.).

III. WEIGHT AND BALANCE:

   a. Revise the aircraft weight and balance. The Sensenich Propeller assembly (propeller, spacer, and attaching bolts) weight 40.45 lbs. The propeller assembly moment arm is -38.8 inches.

IV. Supplemental Flight Manual or Flight Manual Supplement must be installed in aircraft when the above alteration is made. Fill out a 377 form for the alteration and make all necessary changes to the aircraft records.

74DM7S14 INSTALLATION
Cessna 172 I,K,L,M,N,P
K.C.D. 1/16/91

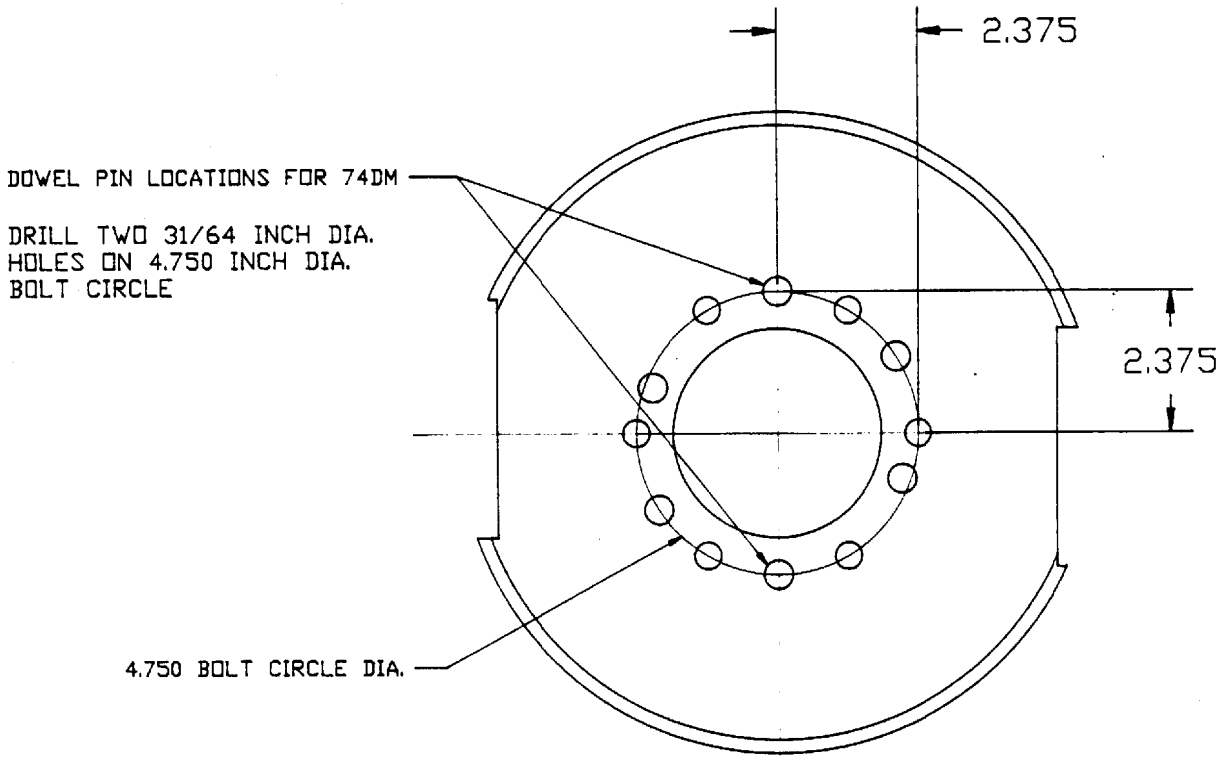

MODIFICATION TO CESSNA REAR SPINNER BULKHEAD, P/N 0550321-10, REQUIRED FOR INSTALLATION OF SENSENICH 74DM7S14 PROPELLER

MATERIAL:			
STOCK:			
HEAT TREAT:			
FINISH:			
WEIGHT:			
SCALE: NONE			
DESIGN:			
DRAWN: K.C.D.			
LTR	DATE	CHANGE	BY

SENSENICH PROPELLER COMPANY

TITLE CESSNA SPINNER MODIFICATION

ASSEMBLY:
NO. REQU'D:
IN PLACE OF:
SUPERCEDES:
DRAWING NUMBER B-1745

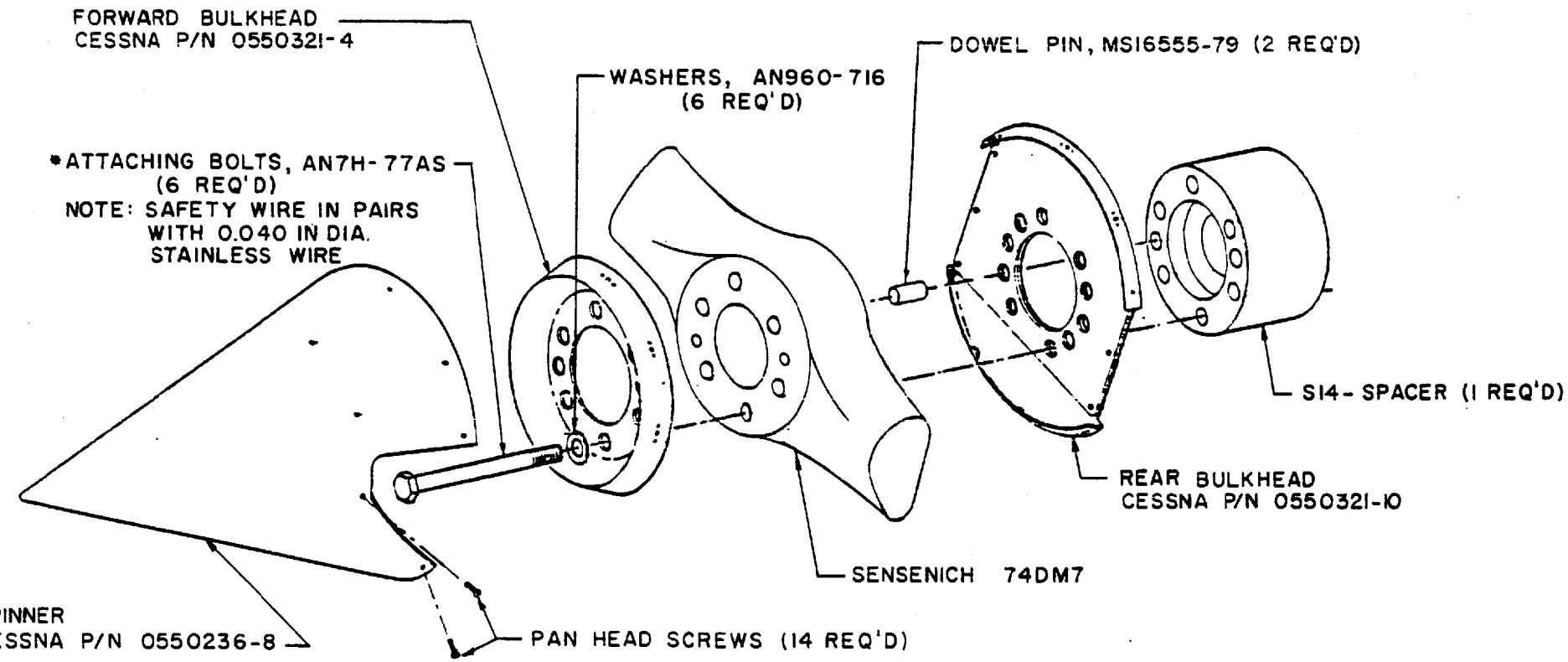

*ORIGINAL McCAULEY BOLT KIT
(#B-4622-20) CAN BE USED.

NOTE: DRAWING NOT TO SCALE

Ltr.	Date	Change	By

Tolerance unless otherwise specified: | Please report discrepancies

SENSENICH PROPELLER COMPANY
LANCASTER, PA

DO NOT SCALE DRAWING
ALL DIMENSIONS ARE
UNLESS OTHERWISE NOTED

Material	Stock	Heat Treat	Finish	Weight	No. Req'd	Scale	Designed By	Drawn By	Checked By	Engr. App'd
								K.C.D.		12-21-90

Assembly:
No. Req'd.
Assembly:
No. Req'd.

74DM7S14
INSTALLATION W/ CESSNA SPINNER

In Place Of:
Superceded By:
SPC-B901